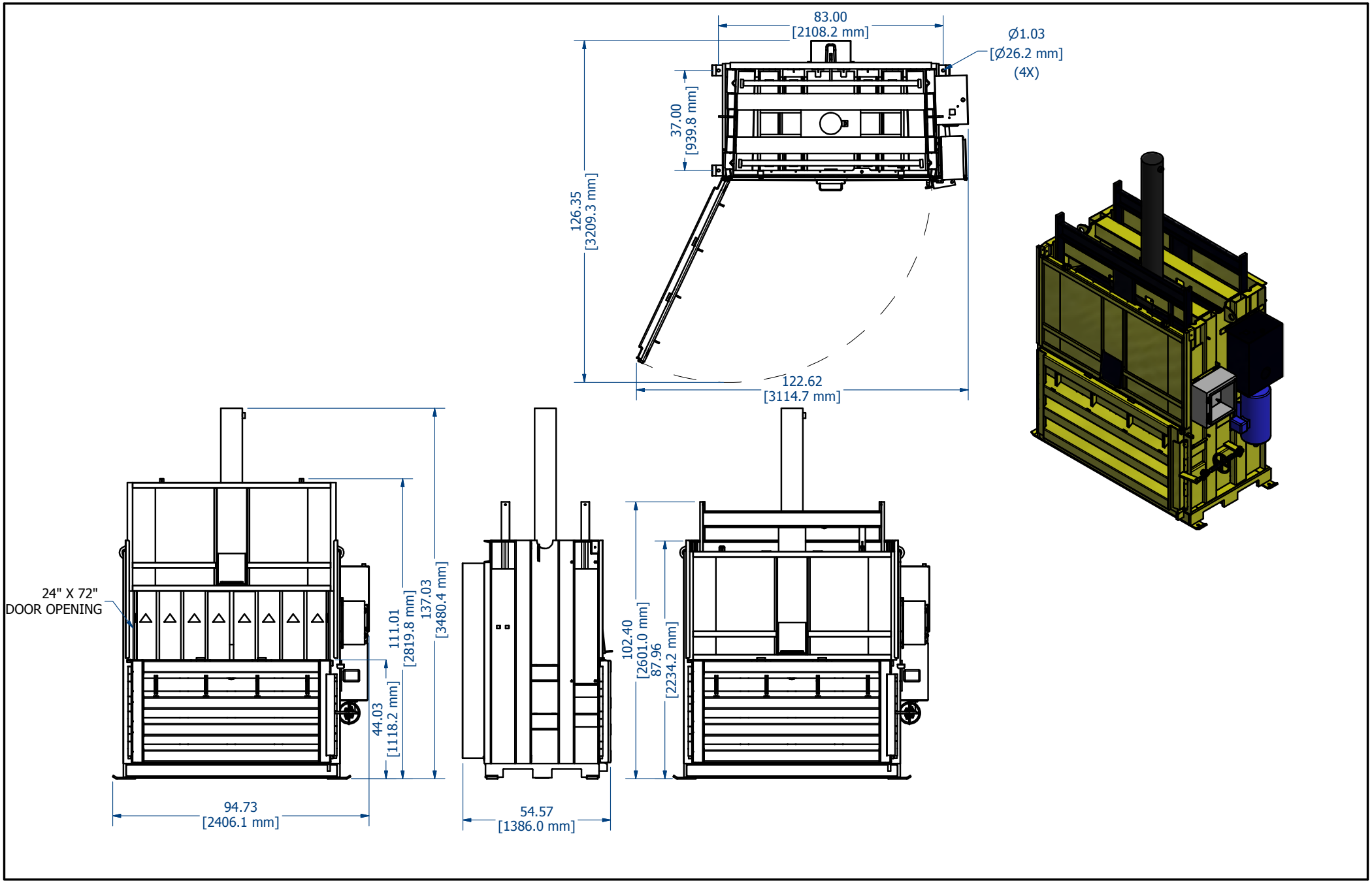
83.00
[2108.2 mm]
Ø1.03
[Ø26.2 mm]
(4X)
37.00
[939.8 mm]
126.35
[3209.3 mm]
122.62
[3114.7 mm]
24" X 72"
DOOR OPENING
111.01
[2819.8 mm]
137.03
[3480.4 mm]
44.03
[1118.2 mm]
94.73
[2406.1 mm]
54.57
[1386.0 mm]
102.40
[2601.0 mm]
87.96
[2234.2 mm]