Self-Contained
Roll-Off Compactors

Harmony Enterprises' Self-Contained Compactors Are Built To Provide Years Of Reliable, Maintenance Free Service.

Harmony Enterprises' Self-Contained Compactors are the ideal solution for areas where sanitation and neatness are of the highest importance. Motels, fast food chains, department stores, clinics, and nursing homes have all found the benefits of the Self-Contained Compactors. These machines are perfect for confined areas where space is a concern.

Harmony Enterprises' Self-Contained Compactors are manufactured in a number of sizes, ranging from 9 cubic yards all the way up to 40 cubic yards, and lengths from 13' to 26'. All of the Self-Contained Compactors combine prime, high quality steel plate, structural steel channel and tubing for some of the strongest compactors available today. All of the Self-Contained Compactors' hydraulic and electrical systems use trusted, name brand components and are of the highest quality available. Harmony Enterprises' Self-Contained Compactors are built to provide years of reliable, maintenance free service.

**HEI-200-30 Pictured

Complete Machine

Certified System

SAI GLOBAL ISO 9001 Quality

Harmony WASTE SOLUTIONS ON A GLOBAL SCALE ENTERPRISES, INC.

704 Main Ave. North • Harmony, MN 55939 USA
Visit our website at: www.harmony1.com email: info@harmony1.com
Toll Free: 1.800.658.2320 International: 1.507.886.6666 Fax: 1.507.886.6706

HEI-200-30 Self-Contained Roll-Off Compactor
(Other Models Also Available*)

COMPACTOR FEATURES

- 3/8" Steel Plate Floor
- 1/4" Steel Plate Side With 4" x 2" x 1/4" Structural Steel Tubing With 6" Channel
- Breaker Bar 6" X 6" X 1/2" Hydraulic Cylinder Mounts
- Replaceable 1/2" UHMW Polyethylene Wear Bars On All Sides, Top And Bottom Of Platen For A Smooth Quiet And Near Frictionless Operation
- Weatherproof Control Panel And Power Pak
- Removable Rear And Top Access Panel

CONTAINER FEATURES

- 3/16" Steel Plate Floor With 6" X 2" X 1/4" Structural Steel Tubing Rails With 2" X 1/2" Steel Bottom Wear Bars
- 3/16" Steel Plate Side, Roof And Door
- Full 3/4" Door Seal
- Side And Bottom Ratchet Latch Door Closer
- Heavy-Duty Door Hinges With Grease Fittings
- Double End Pick-Up
- Tapered Width From 80" At Compactor To 88" At Door (Inside Dimensions)

ELECTRICAL AND HYDRAULIC FEATURES

- (PLC) Controlled Power Unit
- Automatic Single Cycle
- Reverse Button
- Keyed Over-Ride Switch
- Multi Cycle
- 80%-100% Full Lights
- Automatic Shutdown
- 15' Remote
- Fluid Filled Pressure Gauge
- Fluid Inlet Strainer
- Fluid Sump And 15' Hydraulic Hoses
- 4" Side Drain
- Left Or Right Side Hydraulic Connections

SPECIFICATIONS

OVERALL LENGTH.....268" (6807mm)
OVERALL WIDTH.....101" (2565mm)
OVERALL HEIGHT.....108" (2743mm)
CONTAINER CAPACITY.....30 CUBIC YARDS
COMPACTOR CAPACITY.....2 CUBIC YARDS
PLATEN AREA.....60" X 44" X 36" (1524mm X 1118mm X 914mm)
CHARGE OPENING.....42" X 60" (1067mm X 1524mm)
RAM PENETRATION.....12" (305mm)
TWIN CYLINDERS.....4" X 42" X 2 1/2" (102mm X 1067mm X 64mm)
LINE PRESSURE.....2,000 PSI
MAX LINE PRESSURE.....2,500 PSI
MAX RAM FORCE.....63,000 LBS. (28,576Kg)
CYCLE TIME.....45 SECONDS
FLUID CAPACITY.....25 GALLONS (95L)
PUMP.....10.5 GPM
MOTOR.....208/230/460, 10HP, 3PH
APPROX. WEIGHT.....10,700 LBS. (4,853Kg)

PAD REQUIREMENTS FOR THE HEI-200-30

CONCRETE PAD.....120" (3048mm)
MINIMUM LENGTH.....336" (8534mm)
STEEL REINFORCED.....6" THICK (152mm)
MINIMUM.....3,000PSI CONCRETE

OPTIONS: 220V, 7 1/2 HP, 1PH
FLUID RESERVOIR HEATER
LOW OIL SENSOR
ENCLOSED DOGHOUSE
WITH DOOR AND INTERLOCK
WALK-ON OR DRIVE-ON DECK
WITH 42" SAFETY RAILS
SIDE LOADING HOPPERS
THROUGH-THE-WALL CHUTES
CART DUMPER SYSTEM
CONTAINER GUIDE RAILS
OPEN HOPPER
-LOADING DOCK AND GROUND LOADING

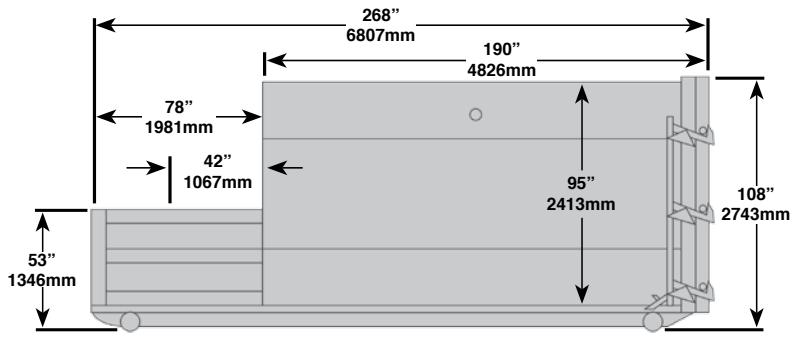

HEI-200-30 Shown Here

*AVAILABLE MODELS	CHARGE CHAMBER	CONTAINER CAPACITY
HEI-50-9 Self-Contained Compactor	1/2 Yard	9 Yard
HEI-100-10 Self-Contained Compactor	1 Yard	10 Yard
HEI-100-15 Self-Contained Compactor	1 Yard	15 Yard
HEI-200-15 Self-Contained Compactor	2 Yard	15 Yard
HEI-200-20 Self-Contained Compactor	2 Yard	20 Yard
HEI-200-30 Self-Contained Compactor	2 Yard	30 Yard
HEI-200-35 Self-Contained Compactor	2 Yard	35 Yard
HEI-200-40 Self-Contained Compactor	2 Yard	40 Yard

Certified System™
SAI GLOBAL
ISO 9001
Quality

Harmony™ ENTERPRISES, INC.
WASTE SOLUTIONS ON A GLOBAL SCALE

Specifications Are Subject to Change Without Notice
Form 051404CC