BALER OPERATIONS

Installing Baling Wire

Warning: No one under the age of 18 may operate this baler. No one under 16 may load material into this baler. Failure to abide may violate federal law.

1. Follow the **Ram Forward/Reverse** procedure to move the ram back to the shear bar proximity switch.
2. Climb up the ladder to the top of the chamber.
3. Insert the clean out rod in each of the six (6) tie slots and clean any debris by moving the rod up and down.

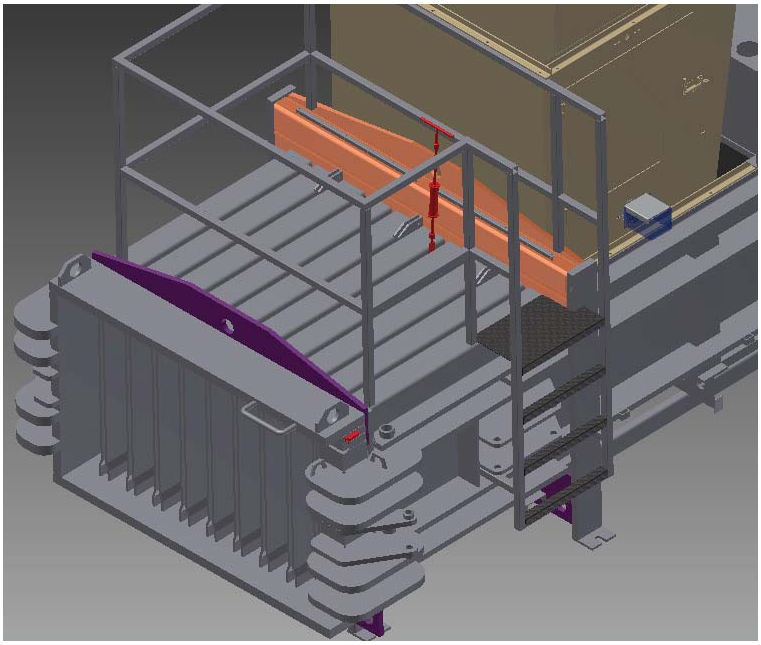

4. Grab the looped end of the bailing wire and feed it down the tie slot until the wire stops.

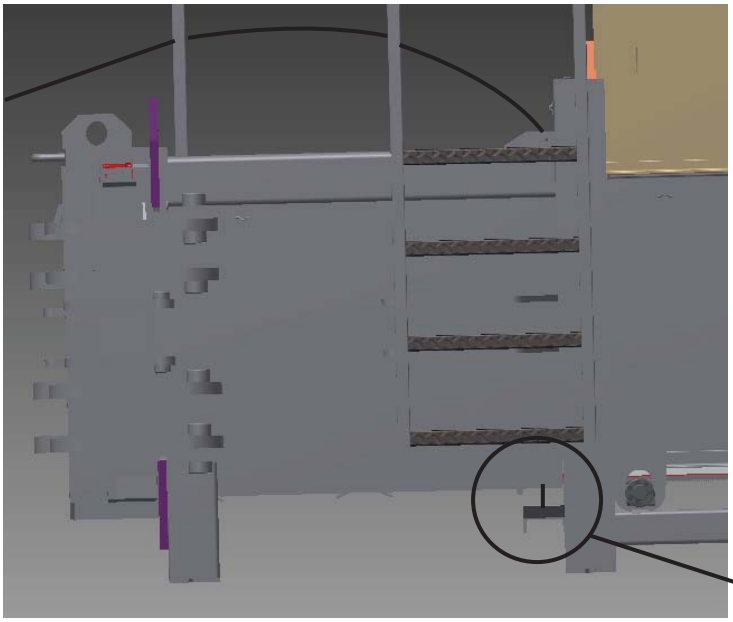

5. Feed the other end of the bailing wire through the top side of the chamber door.

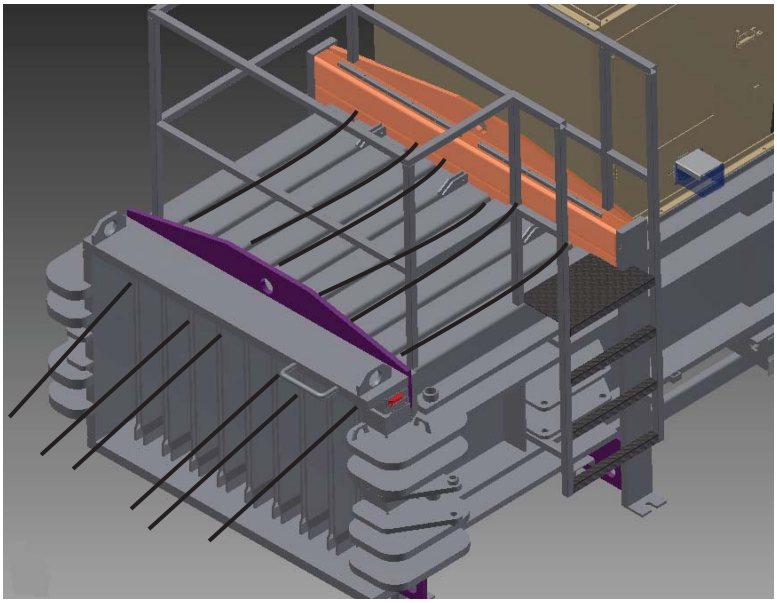

6. See **Operating The Automatic Wire Guides** below.

Operating The Automatic Wire Guides

NOTE: The wire guides will not operate unless the chamber door latch is secure.
NOTE: The wire guides will not operate unless the ram is located on the shear bar proximity switch.

1. Press and hold the black AUX button
2. Press the green WIRE FORWARD button to feed the bailing wire toward the chamber door and out the bottom.
3. The WIRE LIGHT will illuminate when the wire guides are not in the home position. The WIRE LIGHT will flash when the wire guides are in motion.

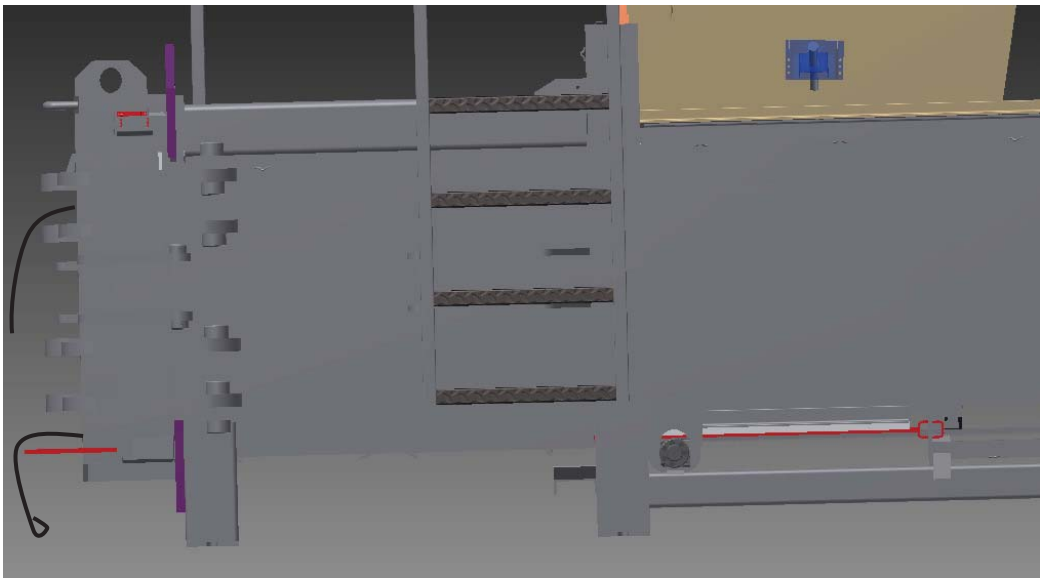

BALER OPERATIONS

Tying A Full Bale

1. Complete the procedure for **Installing Bailing Wire** before proceeding.
2. Thread the straight end of the wire through the looped end at the bottom of the chamber door.

3. Cross the straight end of the wire over itself and twist at least three (3) tines to secure the bailing wire.

4. Repeat steps 2 and 3 for the remaining five (5) pairs of bailing wire.
5. See **Operating The Automatic Wire Guides** below.

Operating The Automatic Wire Guides

NOTE: The wire guides will not operate unless the chamber door latch is secure.
NOTE: The wire guides will not operate unless the ram is located on the shear bar proximity switch.

1. Turn the electrical disconnect to the ON position.
2. Pull out the red EMERGENCY STOP button.
3. Turn the MANUAL-OFF-AUTO key switch to the AUTO position.
4. Press and hold the black AUX button
5. Press and hold the yellow WIRE REVERSE button to retract the bailing wire guides.
6. The WIRE LIGHT will illuminate when the wire guides are not in the home position.

BALER OPERATIONS

Ejecting A Full Bale

Warning: No one under the age of 18 may operate this baler. No one under 16 may load material into this baler. Failure to abide may violate federal law.

1. Verify the white BALE FULL light is illuminated on the control panel.
2. Follow the procedure for **Ram Forward/Reverse** to retract the ram to the shear bar.
3. Complete the procedure for **Tying A Full Bale** before proceeding.
4. Complete the procedure for **Opening The Chamber Door Latch** to open the latch.
   Complete the procedure for **Chamber Door Open/Close** to open the camber door The red LED LIGHT on the front of the baler will turn solid when all bale eject circumstances are met.
   NOTE: The baler is equipped with a proximity switch that will confirm that the chamber door is fully open. No bale can be ejected unless this condition is met.

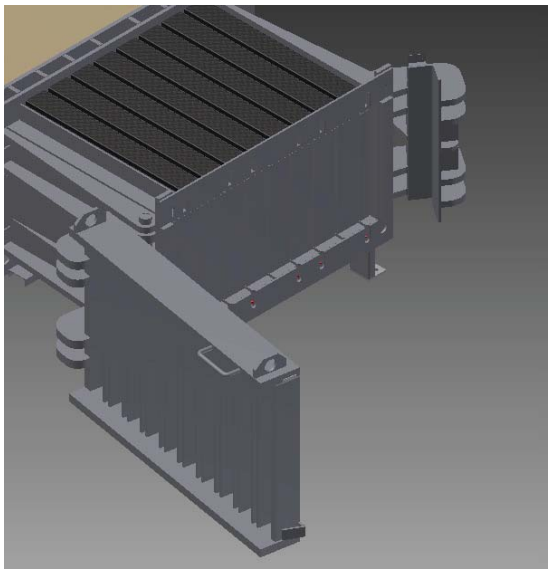

5. Position a fork lift in line with the chamber opening as shown with the fork tines positioned below the bottom edge of the chamber opening.

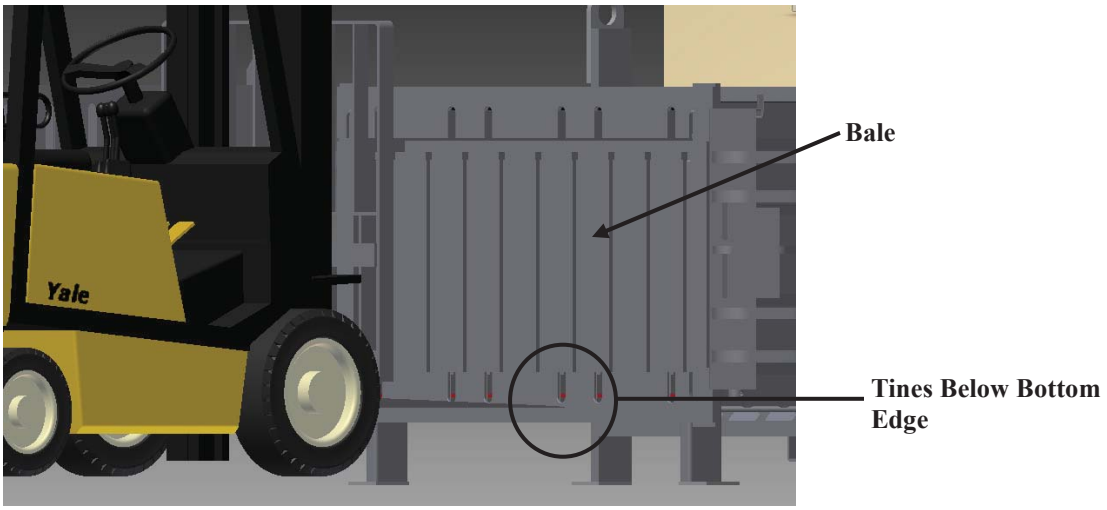

6. Follow the procedure for **Ram Forward/Reverse** to push the bale out the chamber opening and onto the forklift.
7. Clear the chamber opening of any debris.
8. Relocate the bale to an authorized location.
9. Close the chamber door.
10. Follow the procedure for **Securing The Chamber Door Latch** before adding any refuse to the chamber.